12.5mm analog signal isolators /
Transducers power supply

RoHS

FEATURES

- Isolation test voltage of 2000VAC for signal input to output and to power ports
- Ultra-slim 12.5mm case
- High accuracy (0.1%Full Scale)
- High linearity (0.1%Full Scale)
- Extremely low temperature coefficient (35PPM/)
- Low power consumption
- EMI meets CISPR32/EN55032
- EMS meets IEC/EN61000
- Proven reliability with MTBF >500, 000 hours

The current or voltage signal from application field is picked up by this product and transmitted to the control cabinet. One independent power supply is required. Moreover, within the interface of rail power supply, input and output are mutually isolated. A green LED indicates that the device is working. Field devices connected with this product: 2-wire or 3-wire isolation transducer (Distribution), industrial standard current source (not to be used in intrinsically safe area).

Selection Guide

Part No.	Channels	Input Signal	Output Signal	Description
TA100W-11	1 input 1 output	4-20mA	4-20mA	Distributor/isolator
TA100W-15	1 input 1 output	4-20mA	0-10VDC	Distributor/isolator
TA105W-11	1 input 1 output	4-20mA	4-20mA	Distributor
TA105W-14	1 input 1 output	4-20mA	1-5VDC	Distributor
TA105W-15	1 input 1 output	4-20mA	0-10VDC	Distributor
TA140W-51	1 input 1 output	0-10VDC	4-20mA	Distributor/isolator
TA140W-52	1 input 1 output	0-10VDC	0-20mA	Distributor/isolator
TA140W-55	1 input 1 output	0-10VDC	0-10VDC	Distributor/isolator
TA140W-61	1 input 1 output	0-5VDC	4-20mA	Distributor/isolator
TA142W-41	1 input 1 output	1-5VDC	4-20mA	Current loop output
TA200W-11	2 input 2 output	4-20mA	4-20mA	Distributor/isolator
TA200W-15	2 input 2 output	4-20mA	0-10VDC	Distributor/isolator
TA205W-11	2 input 2 output	4-20mA	4-20mA	Distributor
TA205W-15	2 input 2 output	4-20mA	0-10VDC	Distributor
TA240W-51	2 input 2 output	0-10VDC	4-20mA	Distributor/isolator
TA240W-52	2 input 2 output	0-10VDC	0-20mA	Distributor/isolator
TA240W-55	2 input 2 output	0-10VDC	0-10VDC	Distributor/isolator
TA600W-11	1 input 2 output	4-20mA	4-20mA	Distributor/isolator
TA600W-15	1 input 2 output	4-20mA	0-10VDC	Distributor/isolator
TA602W-11	1 input 2 output	4-20mA	4-20mA	

MORNSUN Guangzhou Science & Technology Co., Ltd. reserves the copyright and right of final interpretation

Installation

Standard 35mm DIN rail installation:

1. Insert top of Module into DIN rail;
2. Push bottom of Module into rail until it snaps in.
3.

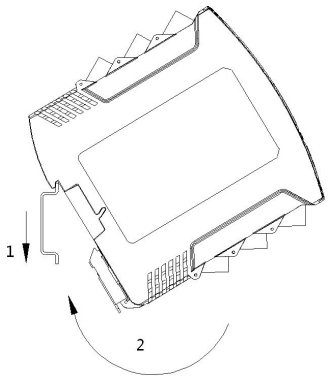

Removal

1. Insert screw driver on the lower end of Module to release clamp (tool edge width ≤ 6mm);
2. Push screw driver up towards Module to slide clamp out;
3. Pull Module up and out of guide rail.

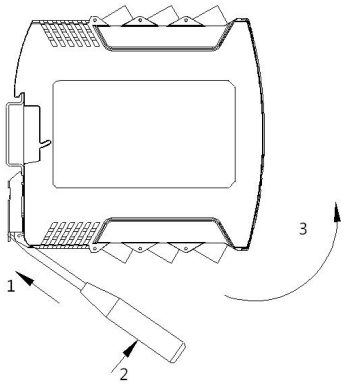

Dimensions

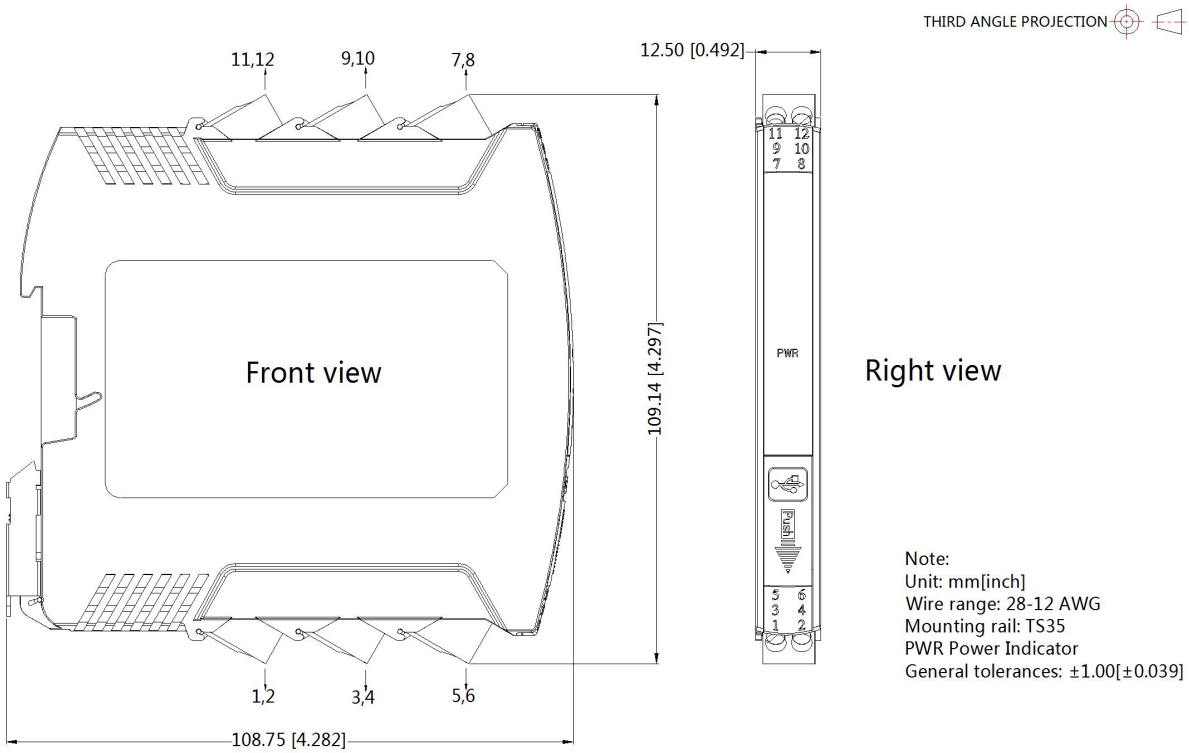

Notes:

1. For additional information on Product Packaging please refer to www.mornsun-power.com. The Packaging bag number: 58040010;
2. Unless otherwise specified, parameters in this datasheet were measured under the conditions of Ta=25 , humidity<75%RH with nominal input voltage and rated output load;
3. All index testing methods in this datasheet are based on company corporate standards;
4. The above are the performance indicators of the product models listed in this datasheet. Some indicators of non-standard models will exceed the above requirements. For details, please contact our technical staff;
5. We can provide product customization service, please contact our technicians directly for specific information;
6. Products are related to laws and regulations: see "Features" and "EMC";

MORNSUN Guangzhou Science & Technology Co., Ltd. reserves the copyright and right of final interpretation

7. Our products shall be classified according to ISO14001 and related environmental laws and regulations, and shall be handled by qualified units.

MORNSUN Guangzhou Science & Technology Co., Ltd.
Address: No. 5, Kehui St. 1, Kehui Development Center, Science Ave., Guangzhou Science City, Huangpu District, Guangzhou, P. R. China
Tel: 86-20-38601850 Fax: 86-20-38601272 E-mail: info@mornsun.cn www.mornsun-power.com

MORNSUN Guangzhou Science & Technology Co., Ltd. reserves the copyright and right of final interpretation